GENERAL TOLERANCE						
DIM. RANGE	0.5 ~ 3	> 3 ~ 6	> 6 ~ 30	> 30 ~ 120	> 120 ~ 400	SURFACE FINISH
TOLERANCE	±0.1	±0.1	±0.2	±0.3	±0.5	1.6

CUSTOMER DRAWING

REVISIONS		
REV	DESCRIPTION	DATE
A	INITIAL RELEASE	2020-06-30

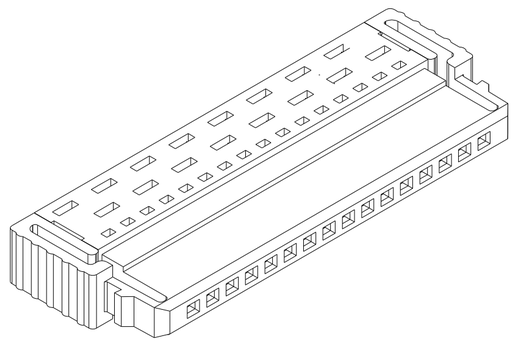

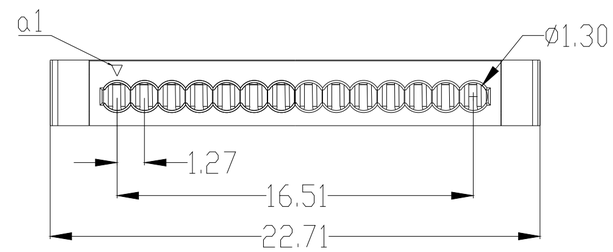

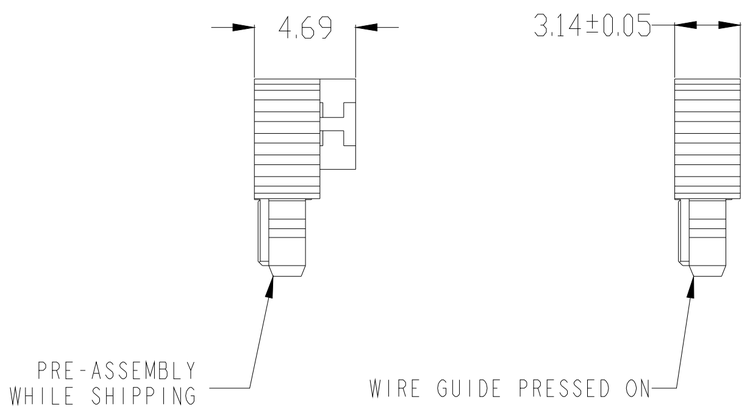

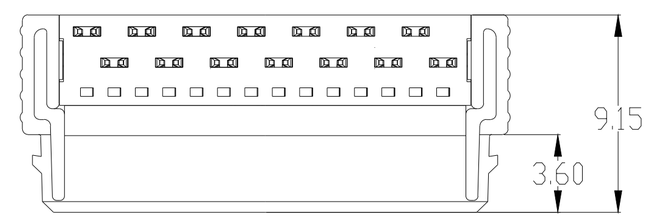

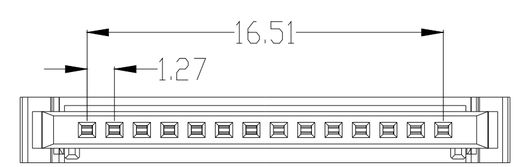

NOTES:

1. THE PRODUCTS ARE RoHS COMPLIANCE.

2. MATERIAL SPEC:
   HOUSING:PA4T-GF30THREMOPLASTIC,UL94 V-0,BLACK COLOR.
   CONTACT:COPPER ALLOY,MATING AREA GOLD PLATING,OTHER AREA TIN PLATING.

UNLESS OTHERWISE SPECIFIED

LINEAR DIMENSIONS ARE IN:
MILLIMETERS
TOLERANCES:
ANGLES= ±2°
DEFAULT LINEAR TOLERANCES SEE TABLE

DIM.& TOL. PER ASME Y14.5M-1994;
DRM PER MIL-DTL-31000;

LEGENDS:
△ =FLAG NOTE CALL OUT
REFERENCE ONLY

SPECIFICATIONS

MATERIAL SPEC.
SEE NOTES 2

PROCESS SPEC.
--

POS	QTY	PART NUMBER	DESCRIPTION	NOTE

APPROVALS		DATE
PREPARED BY	JUSTIN LI	Jun-30-20
ENGINEER IN CHARGE	TYLER QIU	
DESIGN MANAGER	TYLER QIU	
DESIGN ACTIVITY GROUP		

THIRD ANGLE PROJECTION

上海良速电子有限公司

Powerlite

1.27mm Single Row 14pin Female 180℃ cable outlet

U

SIZE	DOCUMENT NO.	REV.
C	PL-FS14101	A

SCALE: REF. SHEET 1 OF 1